SEMASHKO, Nikolay Aleksandrovich; ASHURKOV, Ye.D., redaktor; BARSUKOV, M.I., redaktor; VINOGRADOV, N.A., redaktor; GORFIN, D.V., redaktor; PETROV, B.D., redaktor; RODOV, Ya.O., redaktor; SLONIMSKAYA, N.A., redaktor; GABERLAND, M.I., tekhnicheskiy redaktor

[Selected works] Izbrannye proizvedeniia. Red. kollegiia: E.D. Ashurkov i dr. Moskva, Gos. izd-vo med. lit-ry, 1954. 337 p.
(Public health) (MLRA 7:10)

BARSUKOV, M.I., professor

In memory of N.A.Semashko; 80th anniversary of his birth. Vest. AMN SSSR no.3:56-57 '54. (MLRA 7:11)
(SEMASHKO, NIKOLAI ALEKSANDROVICH, 1874-1949)

BARSUKOV, M.I., professor; BABANSKAYA, K.M., kandidat meditsinskikh nauk.

Tasks for Soviet public health in the light of decisions taken by the September Pleanry Session of the Central Committee of the Communist Party of the Soviet Union. Sov.med.18 no.1:4-7 Ja '54. (MLRA 7:1)

1. Iz Instituta organizatsii zdravookhraneniya i istorii meditsiny im. N.A.Semashko (direktor Ye.D.Ashurkov) Akademii meditsinskikh nauk SSSR. (Public health)

BARSUKOV, M.I., professor

V.I.Lenin and the theory of Soviet public health; on the 85th anniversary of V.I.Lenin's birth. Sov.med. 19 no.4:3-10 Ap '55. (MLRA 8:6)

1. Iz Instituta organizatsii zdravookhraneniya i istorii meditsiny imeni N.A.Semashko (dir. -kandidat meditsinskikh nauk Ye.D.Ashurkov) Akademii meditsinskikh nauk SSSR.

(PUBLIC HEALTH,
in Russia, contributions of V.I.Lenin

BARSUKOV, M.I., professor

Tasks of the public health service in the light of decisions of the 20th Congress of the Communist Party of the Soviet Union. Sov.med. 20 no.5:3-9 My '56. (MIRA 9:9)

1. Iz Instituta organizatsii zdravookhraneniya i istorii meditsiny imeni N.A.Semashko (dir. -kandidat meditsinskikh nauk Ye.D.Ashurkov) Ministerstva zdravookhraneniya SSSR.

(PUBLIC HEALTH,
in Russia, decisions of 20th Congress of Communist Party (Rus))

BARSUKOV, M.I.

KAMEVSKIY, Lazar' Oskarovich; BARSUKOV, M.I., red.

[Participation of Soviet workers in building the public health service] Uchastie trudiashchikhsya SSSR v stroitel'stve zdravookhraneniia. Pod red. M.I.Barsukova. Moskva, Medgiz, 1957. 178 p.
(PUBLIC HEALTH) (MIRA 11:4)

BARSUKOV, M.I.

ASHURKOV, Ye.D.; BARSUKOV, M.I., red.

[History of Soviet public health, 1917-1956] Ocherki istorii zdravookhraneniia SSSR, 1917-1956 gg. Pod red. M.I.Barsukova. Moskva, Medgiz, 1957. 392 p. (MIRA 11:2)
(PUBLIC HEALTH)

BARSUKOV, M.I., doktor med.nauk, prof.

About the Great October Revolution; reminiscences. Zdrav.Ros. Feder. 1 no.10:21-26 O '57. (MIRA 10:12)
(RED CROSS--HISTORY)
(RUSSIA--REVOLUTION, 1917-1921--PERSONAL NARRATIVES)

BARSUKOV, M.I., professor

At headquarters of the October Revolution. Zdorov'e 3 no.11:3-5 N '57. (MIRA 10:12)
(RUSSIA--REVOLUTION, 1917-1921--PERSONAL NARRATIVES)

BARSUKOV, M.I., prof.

Great October Revolution and the creation of Soviet medicine. Vest. AMN SSSR 12 no.5:3-9 '57. (MIRA 11:1)
(MEDICINE,
in Russia (Rus))

BARSUKOV, M.I., prof (Moskva)

Relation of the October Revolution to public health. Sov.med.21 no.10: 3-9 O '57. (MIRA 11:1)
(PUBLIC HEALTH, hist.
in Russia)

BARSUKOV, Mikhail Ivanovich, prof.

Council of the Boards of Physicians. Zdorov'e 4 no.1:7-8 Ja '58.
(PUBLIC HEALTH) (MIRA 11:2)

BARSUKOV, M.I., Prof.

Problems in theory & history of socialist health services. Cesk. zdravot. 6 no.1:10-13 1958.

1. Semaskuv ustav organisace zdravotnictvi a dejin lekarstvi v Moskve.
(PUBLIC HEALTH,
in Czech. (Cz))

BARSUKOV, M.I., Prof.

Problems of medical ethics & the organization of health services. Cesk. zdravot. 6 no.5:213-219 May 58.

1. namestek reditele Semaskova ustavu organisace zdravotnictvi a dejin lekarstvi v Moskve. Prelozil MUDr Ganicky.

(PUBLIC HEALTH
in Czech., organiz. (Cz))
(ETHICS, MEDICAL
in Czech. (Cz))

BARSUKOV, M.I., Prof.

The early days of the Soviet Health Services; memories of the Great Socialist October Revolution. Cesk. zdravot. 6 no.11:617-624 Nov 58.

1. Semashuv ustav organizace zdravotnictvi a dejin lekarstvi v Moskve.
(PUBLIC HEALTH, hist.
Soviet Health Serv. (Cz))

BARSUKOV, M.I., prof. (Moskva)

Main features of the development of Soviet public health planning during the 40 years of Soviet authority. Sov.med. 22 no.7:3-10 Jl '58 (MIRA 11:10)

(PUBLIC HEALTH, in Russia (Rus))

BARSUKOV, M.I., Prof.

Theoretical aspects in the study of the history of medicine in the USSR. Cesk. zdravot. 8 no.1:19-25 F '60.

1. Semaskuv ustav organizace zdravotnictvi a dejin lekarstvi v Moskve.

(HISTORY OF MEDICINE)

GORFIN, David Vladimirovich, prof.; BARSUKOV, M.I., prof., red.; ROSIOTSKIY, I.B., red.; NIKONOVA, A.M., tekhn. red.

[Outline history of the development of the rural public health system in the U.S.S.R. 1917-1959] Ocherki istorii razvitiia sel'skogo zdravookhraneniia SSSR, 1917-1959 gg. Pod red. M.I.Barsukova. Moskva, Medgiz, 1961. 235 p. (MIRA 15:2)

(PUBLIC HEALTH, RURAL)

BARSUKOV, M.I., prof.

Program for the people's happiness and health. Zdorov'e 7 no.11: 1-3 N '61. (MIRA 14:11)

(PUBLIC HEALTH) (COMMUNISM)

BARSUKOV, Michail Ivanovic, prof.

A meeting of M. P. Pogodin with J. E. Purkyne. Cas.lek.cesk 100 no.19: 597-598 12 My '61.

1. Semaskuv ustav organizace zdravotnictvi a historie mediciny, Moskva.

(BIOGRAPHIES)

Sofia, [illegible], vol 5, no 1, January/February [illegible]

1. "The Problem of Preventive Medicine in a Socialist Society," Professor K.I. [illegible], chief of the Department of the History of Public Health, "N.A. Semashko" Institute of Public Health, Organization and the History of Medicine, [illegible] pp 4-10.

2. "On the Virus Etiology of Cancer," P. [illegible]; pp 11-25.

3. "On the Antigenic Similarity between Normal and Malignant Tissues in Man and Mice," [illegible] and M. [illegible] of the Virus Laboratory (headed by Professor V.V. [illegible]) of the P.A. Kherzen Institute (Professor A.[illegible], Director), Moscow; pp [illegible].

4. "Cancerous Substances in a Surrounding Medium and the Possibilities of Protection," [illegible] of the Oncological Institute in Sofia; pp [illegible].

5. "Hygiene and Medicine," Professor A. [illegible]; pp 37-45.

6. "Occupational Diseases in Bulgaria 1959-1960," Airono [illegible]; pp 46-49.

7. "Fundamental Problems in the Labor Pathology of Agricultural Workers," Dobrin Christo [illegible], Director of the Clinic for Occupational Diseases, Sofia; pp 50-55.

8. "Preventive Medicine with Sodium Nitrate During Lead Protection and Its Therapeutic Application in the Treatment of Chronic Lead Poisoning," Dr. S. [illegible] of the Sofia Sanitation-Epidemiological Station (Dr. [illegible] TODOROV, chief physician in charge); pp 56-59.

9. "The Diagnostic Significance of Certain Indicators for Changes in the Higher Nervous Activity in the Event of Lead Poisoning," V. [illegible], V. [illegible], and G. [illegible] of the Department of Hygiene and Labor Hygiene and the Clinic for Occupational Diseases, Professor [illegible], director, Sofia, with the Health Unit [illegible] "Factory 12" headed by Dr. S. [illegible]; pp 60-62.

— 1/1 —

BARSUKOV, M.I., prof. (Moskva)

Problems of prevention under the conditions of the extensive building of a communist society. Sov. zdrav. 21 no.3:7-11 '62. (MIRA 15:3)

(PUBLIC HEALTH) (MEDICINE) (MEDICINE, PREVENTIVE)

NOVOZHILOV, M.G., prof.; TARTAKOVSKIY, B.N., kand.tekhn.nauk; KOVALENKO, A.A., inzh.; BARSUKOV, M.I., inzh.

Basic parameters of working trenches in constructing open pits with continuously operating machines. Izv. vys. ucheb. zav.; gor. zhur. 5 no.10:18-26 '62. (MIRA 15:11)

1. Dnepropetrovskiy ordena Trudovogo Krasnogo Znameni gornyy institut imeni Artema. Rekomendovana kafedroy otkrytykh rabot.
(Nikopol' region—Strip mining)

TARTAKOVSKIY, B.N., kand. tekhn. nauk; KOVALENKO, A.A., inzh.; BARSUKOV, M.I., inzh.

Determination of the parameters of working trenches for open pits in the Nikopol' manganese deposit. Shakht. stroi. 7 no.6: 15-17 Je '63. (MIRA 16:7)

1. AN UkrSSR.
(Nikopol' region—Strip mining)

TARTAKOVSKIY, B.N.; KOVALENKO, A.A.; BARSUKOV, M.I.; VARSHAVSKIY, A.M.

Improving mining technology using a transporter system of mining with continuous machine units. Izv. AN Kir. SSR. Ser. est. i tekh. nauk 5 no.1:51-61 '63. (MIRA 16:11)

BARSUKOV, N.I., otv. red. (Moskva); LUSHNIKOV, A.G., red.; ZHUK, A.P. red.; BAGDASAR'YAN, S.N., red.; LISITSYN, Yu.P., red. (Moskva)

[Annals of the history of medicine; collection of papers] Annaly istorii meditsiny; sbornik trudov. Moskva, Medgiz, 1963. 150 p. (MIRA 17:6)

1. Vsesoyuznoye nauchnoye istoriko-meditsinskoye obshchestvo.

NOVOZHILOV, M.G., prof., d-tor tekhn.nauk; TARTAKOVSKIY, B.N., kand.tekhn. nauk; BARSUKOV, N.P., inzh.; KRASNIKOV, A.S., kand.tekhn.nauk; SAMGRODOV, Yu.P., kand.tekhn.nauk

Flow sheets for mining working trenches with continuous machine units. Gor.zhur. no.12:13-18 D '64. (MIRA 18:1)

1. Dnepropetrovskiy filial instituta mekhaniki AN UkrSSR (for Novozhilov, Tartakovskiy, Barsukov). 2. Institut gornogo dela im. A.A.Skochinskogo (for Krasnikov, Samgrodov).

LOGOMINOV, Mikhail Ivanovich, inzh.-tekhn. nauk, prof.; [illegible]; [illegible], Mikhail [illegible]; VASIL'EV, [illegible], red.

[Developing a technology for grain-fill line construction by using continuous technique] Razrabotka tekhnologii [illegible] tekhnologicheskoi linii po [illegible] [illegible]. Moskva, Kolos, 1967. [illegible] p. (MIRA 18:[illegible])

BARSUKOV, N.A., prof., red.; LUSHNIKOV, A.G., red.

[Essays on the historiography of Soviet public health] Ocherki istoriografii sovetskogo zdravookhraneniia. Moskva, Meditsina, 1965. 203 p. (MIRA 18:7)

BONDAREV, P.I., BARSUKOV, M.I., [illegible], MINAKOV, V.A., MINEEVA, N.I.; KARLIN, V.M.

Effect of sudden temperature variations on the structure and properties of some pyroceramics. Izv. AN SSSR. Neorg. mat. 1 no.[illegible] 0,6 [illegible]. (MIRA 18:8)

APPROVED FOR RELEASE: 06/06/2000 CIA-RDP86-00513R000203720006-1"

BARSUKOV, V.N.; TISHCHENKO, M.I.; SHAPOVALOV, A.I.

Direct current amplifier for studies with intracellular microelectrodes. Biofizika 7 no.3:360-366 '62. (MIRA 15:8)

1. Spetsial'noye konstruktorsko-tekhnologicheskoye byuro "Biofizpribor" i 1-y Leningradskiy meditsinskiy institut imeni I.P.Pavlova.

(ELECTROPHYSIOLOGY)

BARSUKOV, V.N.; VISHNYAKOV, Ya.D.; UMANSKIY, Ya.S.

Characteristics of the fine crystal structure of titanium following cold straining. Metalloved. i term. obr. met. no.11:48 N '63. (MIRA 16:11)

1. Moskovskiy institut stali i splavov.

L 17 -66 EWP(m)/EWP(w)/EWP(t)/ETI IJP(c) JD/JW

ACC NR: AP6027782 SOURCE CODE: UR/0126/66/022/001/0027/0031

AUTHOR: Adamas'yev, S. V.; Barsukov, V. N.; Pliner, G. Ye.; Cherepkova, K. F.

ORG: Leningrad Steel Rolling Plant (Leningradskiy staleprokatnyy zavod)

TITLE: Recrystallization and magnetic properties of permalloy 65N

SOURCE: Fizika metallov i metallovedeniye, v. 22, no. 1, 1966, 27-31

TOPIC TAGS: permalloy, metal recrystallization, magnetic property, magnetic permeability / / permalloy 65N

ABSTRACT: Permalloy 65N (0.02% C, 0.44% Mn, 0.21% Si, 0.008% P, 0.007% S, 65.5% Ni, remainder Fe) differs from the other binary Fe-Ni alloys in that it acquires high magnetic properties only after its heat treatment in a magnetic field, due to the attendant directional ordering of its atoms which results in the rise of magnetic anisotropy. In this connection, the authors investigated the effect of the degree of deformation (from 17 to 98.6%) and temperature of annealing (from 700 to 1200°C) on the structure of this alloy and on its magnetic properties before and after thermomagnetic treatment. The thermomagnetic treatment itself was carried out in a vacuum (residual pressure 10^{-2} mm Hg) at 650°C in a 10-oersted magnetic field. Grain

UDC: 669.15'24.018.58

Card 1/3

L 059005-67

ACC NR: AP6027782

size was examined metallographically and magnetic properties were measured by the ballistic d-c method. Findings: on the basis of the concomitantly plotted recrystallization diagram (Fig. 1) it is established that three basic types of recrystallization structures may be induced in permalloy 65N for the degrees of deformation and temperatures considered. Thus, for the

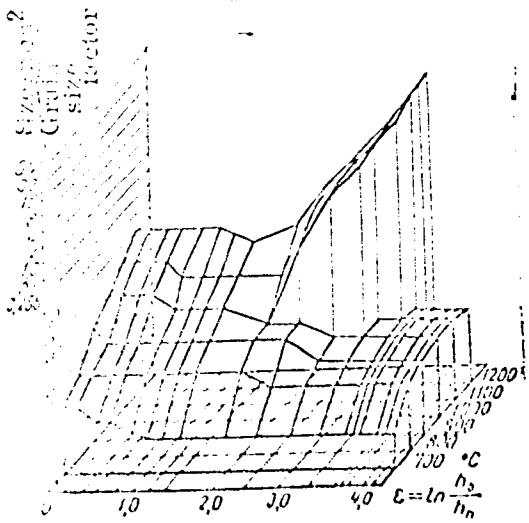

Fig. 1. Recrystallization diagram of the alloy 65N

L 09165-67
ACC NR: AP6027782

deformation $\epsilon < 2.0$ (85%) grain size monotonically increases with temperature, the recrystallized grains display non-ordered orientation and the recrystallization is either primary or preliminary; For $\epsilon > 2.0$ annealing temperatures below 1000°C lead to the formation of a cubic texture of primary recrystallization; and for $\epsilon \sim 2.0$-2.3 (85-90%), following annealing at 1000°C, large extended grains of secondary recrystallization are observed. The specimens displaying the maximum magnetic permeability (450,000-500,000 gauss/oe), the most rectangular hysteresis loop and the lowest coercive force (~0.002 oe) were found to be those which, prior to their thermomagnetic treatment, had a secondary recrystallization structure with maximally large grains. "The authors are indebted to the late Professor V. S. Mes'kin for a critical examination of the MS and for his interest in this project." Orig. art. has: 3 figures.

SUB CODE: 11, 20, 13/ SUBM DATE: 25Nov64/ ORIG REF: 008/ OTH REF: 002

Card 3/3 nst

BARSUKOV, V.S.; MALINOVSKIY, O.V.; MITYUSHOVA, N.M.

Dynamics of the postradiation restoration of yeast cells as related to the dose of gamma irradiation. Dokl. AN SSSR 151 no.1:209-212 Jl '63. (MIRA 16:9)

1. Institut fiziologii im. I.P.Pavlova AN SSSR. Predstavleno akademikom V.N.Chernigovskim.

(GAMMA RAYS--PHYSIOLOGICAL EFFECT) (YEAST)

BARSUKOV, V.S.; MALINOVSKIY, O.V.; MITYUSHOVA, N.M.

Postradiation restoration of yeast cells irradiated under aerobic and anaerobic conditions. Dokl. AN SSSR 153 no.5: 1199-1201 D '63. (MIRA 17:1)

1. Institut fiziologii im. I.P. Pavlova AN SSSR. Predstavleno akademikom V.N. Chernigovskim.

ACCESSION NR: AP4006497 S/0020/63/153/005/1199/1201

B

AUTHOR: Barsukov, V. S.; Malinovskiy, O. V.; Mityushova, N. M.

TITLE: Postradiation restoration of yeast cells irradiated under aerobic and anaerobic conditions.

SOURCE: AN SSSR. Doklady*, v. 153, no. 5, 1963, 1199-1201

TOPIC TAGS: yeast cell, Saccharomyces cerevisiae, irradiation, yeast cell, cell restoration, yeast cell restoration, dose effect, genetic damage, oxygen effect, cytoplasmic structure, cytoplasm injury, radiosensitivity, aerobic irradiation, anaerobic irradiation

ABSTRACT: The points of attack of the oxygen effect under the described conditions were studied on a suspension of a 3 day-old culture of Sacch. cerevisiae (tetraploid strain), capable of recuperation in water without propagation. Test conditions and procedure for removing O_2 are described. After irradiation with a Co^{60} source at varying doses the suspensions were placed

Card 1/2

ACCESSION NR: AP4006497

in water at 30C for 0-20 hours for recuperation of both lots under aerobic conditions, then transferred to agar; their survival was determined by the macrocolony method. In the graphed results the curves of survival and recuperation rates coincided for aerobic and anaerobic conditions, suggesting therefore that oxygen acts only as a "dose-modifying factor" and does not qualitatively modify the radiation injury. The oxygen ratio with respect to the recuperation rate (based on LD_{50}) was 3 ± 0.2, with respect to the survival rate 2.98 ± 0.09, and remained unchanged within the error limits for all test doses. Under both conditions the recuperation rates were equal for equal survival rates. The probability equations referring to these tests are presented and agree with the above findings. Thus the influence of oxygen during irradiation is restricted to increasing destruction of massive cytoplasmic cell structures, with a less probable influence on the number of primary genetic injuries. Orig. art. has: 1 figure and 3 equations

ASSOCIATION: Institut fiziologii im. I. P. Pavlova Akademii nauk SSSR (Institute of Physiology, Academy of Sciences, SSSR)

Card 2/3

APPROVED FOR RELEASE: 06/06/2000 CIA-RDP86-00513R000203720006-1"

[illegible], V. S.

Qualitative analysis of some characteristics of the yeast cell roster after irradiation. Radiobiologia 2 no. 5 [illegible] 802 [illegible].

1. Institut Fiziologii imeni I. P. Pavlova AN [illegible], Leningrad.

ACCESSION NR: AT4044487 S/0000/64/000/000/0041/0046

AUTHOR: Barsukov, V.S., Malinovskiy, O.V., Mityushova, N.M.

TITLE: The importance of the cytoplasm in the recovery of cells from genetic radiation damage

SOURCE: Vosstanovitel'ny*ye protsessy* pri radiatsionny*kh porazheniya kh (Recovery from radiation injuries); sbornik statey. Moscow, Atomizdat, 1964, 41-46

TOPIC TAGS: radiation damage, genetic radiation damage, mutation, cytoplasm

ABSTRACT: In experiments on several diploid and tetraploid strains of Saccharomyces cerevisiae, the yeast was irradiated in aqueous suspension at 30C with gamma rays (Co^{60}) at an intensity of 880 rads/minute. At various times after irradiation, the cells were plated on nutrient agar and the survival rate was determined by the appearance of colonies. The results showed that the recovery rate is qualitatively the same for all strains of yeast, but is inversely dependent on dosage. The rate of recovery is constant for the first 20-30 hours, after which it drops markedly. Since the degree of damage to the cytoplasm also increases in direct relation to the dose, it appears that the recovery from genetic mutations of the dominant lethal type involves the participation of cytoplasmic structures

Card 1/2

ACCESSION NR: AT4044487

and follows the all-or-none law. Most such mutations are apparently reversible. Irradiated populations of yeast cells can be described by a number of parameters characterizing the ability of the cells to recover. Orig. art. has: 2 figures and 5 formulas.

ASSOCIATION: none

SUBMITTED: 29Jan64 ENCL: 00 SUB CODE: LS

NO REF SOV: 004 OTHER: 003

Card 2/2

L 16809-66 EWT(1)/EWT(m)/T JK
ACC NR: AT6003879 SOURCE CODE: UR/2865/65/004/000/0451/0460

AUTHOR: Barsukov, V. S.; Malinovskiy, O. V.; Mityushova, N. M.

ORG: none

49
B+1
6,44,55

TITLE: Significance of postradiation restoration of genetic structures for cell radiosensitivity. I. Quantitative principles of postradiation restoration of yeast cells 19

SOURCE: AN SSSR. Otdeleniye biologicheskikh nauk. Problemy kosmicheskoy biologii, v. 4, 1965, 451-460

TOPIC TAGS: ionizing radiation, radiobiology, yeast, radiation injury, cytoplasm, radiation protection, chromosome, mitosis

ABSTRACT: A tetraploid strain of *Saccharomyces cerevisae* yeast cells was irradiated with a GUT-Co^{60}-400 source at a dosage of 1300 rad/min. The temperature of the suspension was held at 4° to preclude restoration during the irradiation. Part of the cells were sown on agar and the remainder immersed in water at 30° for various periods up to 24 hrs. Taking t as the time the cells were immersed in water and the initial number of damaged cells at $t = 0$ as unity, the number of damaged cells

Card 1/2 2

L 16809-66

ACC NR: AT6003879

was found to decrease according to the formula

$$\omega(D, t) = e^{-\int_0^t v(t)dt},$$

where $\omega(D, t)$ is the number of damaged cells irradiated with dose D (in rads) and immersed in water for t hour, v is the rate of restoration of the population of damaged cells or the probability for restoration of an individual cell in unit time. It was found that the rate of restoration did not depend on time within a 24 hr period. However, after 24 hrs the rate of restoration dropped and unirradiated cells in the control sample started dying. The rate of restoration as a function of irradiation dose is graphed. Injured structures were restored throughout the entire cell. It is concluded that radiation injuries of the dominant lethal type are largely reversible in yeast cells and that virtually all cytoplasmic structures participate in their restoration. Orig. art. has: 3 figures, 8 formulas.

SUB CODE: 06/ SUBM DATE: 00/ ORIG REF: 004/ OTH REF: 009

Card 2/2

BARSUKOV, V.S.; MALINOVSKIY, O.V.; MITYUSHOVA, N.M.

Postradiation regeneration of yeast cells during the stationary phase of growth. Dokl. AN SSSR 161 no.1:228-229 Mr '65. (MIRA 18:3)

1. Institut fiziologii im. I.P. Pavlova AN SSSR. Submitted May 15, 1964.

33809
S/137/62/000/001/077/237
A060/A101

18.5100

AUTHORS: Kagane, L. Ya., Barsukov, V. V.

TITLE: Production of sheet cast-iron

PERIODICAL: Referativnyy zhurnal, Metallurgiya, no. 1, 1962, 4, abstract 1D19 (V sb. "Polucheniye izdeliy iz zhidk. met. s uskoren. kristallizatsiyey". Moskva-Kiyev, Mashgiz, 1961, 164 - 168)

TEXT: Crude iron sheet 0.7 - 1.5 mm thick obtained by forming from molten metal, possesses after rolling satisfactory mechanical characteristics (σ_b 30 - 32 kg/mm^2, δ 8 - 10%) and may be utilized in machine construction and also for a number of articles of domestic use instead of steel sheet. The TsKTB has worked out the technological processes, the designs of installations, and the technological schedules for crude iron sheet production. Some variants of the organization of crude-iron sheet production are cited. In the production of crude-iron sheet amounting to 25,000 tons per annum, the molten metal at 1,420°C is obtained from a cupola-furnace with productivity of 8 tons per hour. The molten metal is held-over in the ladle to reduce non-metallic impurities. At a temperature of 1,260 - 1,280°C the pouring of the metal in crystallizer rolls begins. The

Card 1/2

33809
S/137/62/000/001/077/237
A060/A101

Production of sheet cast-iron

strip being formed is cut by rotating cutters into separate sheets which are stacked into stacks. Five-ton stacks are supplied for heat-treatment - graphitizing annealing. Then the crude-iron sheets undergo trimming and are directed to a cam press for the stamping of articles. Variants for the production of reduced crude-iron sheet with improved mechanical characteristics and for the manufacture of crude-iron sheet in rolls are also worked out. There are considerable prospects for the mastery of production of sheet from molten steel.

G. Grigoryan

[Abstracter's note: Complete translation]

Card 2/2

BARSUKOV, V. V.

Dissertation: "Survey of the Fish of the Family Anarichodidae." Cand Biol Sci, Inst of Zoology, Acad Sci USSR, Moscow, Oct-Dec 53. (Vestnik Akademii Nauk, Moscow, Jun 54)

SO: SUM 318, 23 Dec 1954

BARSUKOV, V.V.

Materials on the biology of propagation of the White Sea wolf fish (Anarhichas lupus L.). Zool.zhur. 32 no.6:1211-1216 N-D '53. (MLRA 6:12)

1. Zoologicheskiy institut Akademii nauk SSSR.
(White Sea--Wolf fish) (Wolf fish--White Sea)

BARSUKOV, V.V.

Replacement of teeth in the wolf fish (Family Anarhichadidae). Dokl.AN SSSR 95 no.4:897-899 Ap '54. (MLRA 7:3)

1. Zoologicheskiy institut Aka i nauk SSSR. (Wolf fish)

BARSUKOV,V.V.

Variability of the number of rays in the fins of the wolf fish (Anarhichas lupus lupus L.) Dokl. AN SSSR 103 no.4:715-716 Ag '55. (MLRA 8:11)

1. Zoologicheskiy institut Akademii nauk SSSR. Predstavleno akademikom Ye.N.Pavlovskim

(Wolf fish)

BARSUKOV, V.V.

The White Sea wolf fish (Anarhichas lupus maris-albi Barsukov). Vop.ikht. no.6:129-135 '56. (MLRA 9:8)

1. Zoologicheskiy institut Akademii nauk SSSR.
(White Sea--Wolf fish)

Distribution of wolf fishes (Anarhichas lupus, A. minor, and A. latifrons) in the Barents Sea. Vop. ikht. no.8:2[illegible] (MIRA 10:2)

1. Vsesoyuznyy nauchno-issledovatel'skiy institut morskogo rybnogo khozyaystva i okeanografii.
(Barents Sea--Wolf fish)

BARSUKOV, V.V.

Fishes of the Provideniya Bay and contiguous waters washing the Chukchi Peninsula. Trudy zool. inst. 25:130-163 '58. (MIRA 11:8)
(Chukchi Peninsula--Fishes)

BARSUKOV, V.V.; PERMITIN, Yu.Ye.

A new species of the genus Pagetopsis (family Chaenichthyidae) [with summary in English]. Zool. zhur. 37 no.9:1409-1411 S '58. (MIRA 11:10)

1.Zoologicheskiy institut AN SSSR, Leningrad.
(Antarctic regions--Chaenichthyidae)

BARSUKOV, V.V.

Age groups and growth rate of pike perch in Rybinsk Reservoir. Trudy Inst. biol. vodokhran. no.1:188-210 '59.

(MIRA 13:2)

(Rybinsk Reservoir--Perch)

BARSUKOV, V.V.; NIZOVTSEV, G.P.

Feeding habits of the wolf fishes Anarrhichas latifrons Steenstrup et Hallgrimsson, A. minor Olafsen, and A. lupus L. in the Barents Sea. Trudy M. I no.2:203-206 '60. (MIRA 14:2)
(Barents Sea—Wolf fish) (Fishes—Food)

BARSUKOV, V.V.

Systematics of char (genus Salvelinus) of the Chukchi Peninsula. Vop.ikht. no.14 3-17 '60. (MIRA 13:8)

1. Zoologicheskiy institut Akademii nauk SSSR.
(Chukchi Peninsula--Trout)

BARANENKOVA, A.S.; BARSUKOV, V.V.; PONOMARENKO, I.Ya.; SYSOYEVA, T.K.; KHOKHLINA, N.S.

Morphological characteristics, distribution, and feeding of young wolf fishes (Anarchichas lupus L., A.minor Olafsen, A.latifrons Steenstrup et Hallgrimsson) in the Barents Sea. Zool. zhur. 39 no.8:1186-1200 Ag '60. (MIRA 13:8)

1. Polar Institute of Marine Fisheries and Oceanography, Murmansk, and Zoological Institute of the U.S.S.R. Academy of Sciences, Leningrad. (Barents Sea--Wolf fish)

BARSUKOV, V.V.

Age of the whitefish Coregonus muksun of the Ob' River and some related theoretical problems. Zool. zhur. 39 no. 10:1525-1530 O '60. (MIRA 13:11)

1. Zoological Institute of the U.S.S.R. Academy of Sciences, Leningrad.
(Ob' River--Whitefishes) (Scales (Fishes))

BARSUKOV, V.V.

Dates of the change of teeth in Atlantic wolf fishes(Anarchicahdidae). Zool. zhur. 40 no.3:462-465 Mr '61. (MIRA 14:3)

1. Zoological Institute of the U.S.S.R. Academy of Sciences Leningrad.
(Atlantic Ocean--Wolf fish)
(Dentition)

Papers submitted for the 10th Pacific Science Congress, Honolulu, Hawaii 21 Aug-6 Sep 1961.

AGAFONOV, G. V., [illegible], All from the Institute of Geology, Academy of Sciences USSR - "The bottom relief of the Pacific Ocean and its cartographic representation" (Section VII.A)

AFRAMOVICH, A. P., Institute of Geology, Academy of Sciences USSR - "Mytophil fishes of the Antarctic and the problem of their bipolar distribution in the Pacific Ocean" (Section III.C)

ANTIPIENKO, P. F., and [illegible], Institute of Oceanology - "The manganese concretions of the Pacific Ocean" (Section VII.C.1)

APH----IEV, G. D. (Name blurred, but may be [illegible]), Institute of Geology of the Deposits, Petrography, Mineralogy and Geochemistry - (Title of paper is blurred, following is approximate title) - "Microgeochemistry (sub-layer and petrographic data" (Section VII.C)

BALAKINA, L. M., Institute of Earth Physics Institute Yu. Schmidt - "The character of stresses and ruptures in the earthquake foci of the Pacific seismic zone" (Section VII.C.2)

BANDOROVICH, I. V., Institute of Geology, "On the Pacific origin of the Anarchinskline facility" (Section III.C

BAZALIN, A. M., Yakutsk State University - "On the tide phenomena in the waters of the Far East" (Section VII.C)

BELOUSOVA, E. V., Institute of Oceanology - "On the transformation of the plankton of the Pacific drift and in the adjacent waters" (Section III.C)

BELOUSOVA, Y. V., and [illegible], Institute of Earth Physics Institute O. Yu. Schmidt - "Genesis and Age of the abyssal depressions of the sea of Japan" (Section VII.C.2)

BELYAEVA, I. M., Institute of Oceanology - "Accumulation of squid beaks and shark teeth at the ocean floor" (Section III.C)

BERKOVICH, F. L., Institute of Oceanology - "Recent deformation and the geological history of the Okhotsk sea" (Section VII.C.1)

BERKOVICH, F. L., LIGITSKIY, A. P., [illegible], and [illegible], N. S., Institute of Oceanology - "Recent sediments of the Pacific" (Section VII.C.1)

BIRCHENKO, Ya. A., and VINOGRADOV, M. Ye., Institute of Oceanology - "Some specific features in the geographical distribution of abyssal pelagic animals (Amphipoda)" (Section III.C)

BOGDANOV, S. T., Institute of Oceanology - "Characteristics of tidal lines and the character of tidal flows and in the Pacific Ocean" (Section VII.B)

BOGDANOV, N. G., [illegible], K. V., and [illegible], M. Ye., Institute of Oceanology - "The distribution of the [illegible] biomass in the Pacific Ocean" (Section III.C)

BOGDANOVSKIY, O. K., Institute of Geology Exploration of Inflammable Materials - "The diagenetic changes in bottom sediments from the central part of the Pacific" (Section VII.C.1)

BOGDANOVA, N. G., Institute of Geology - "Sedimentation and the regularities in the distribution of mineral resources in the geographical basins of the Tertiary period in the area of Kamchatka and the Sakhalin Island" (Section VII.C)

BOLTOVSKOY, G. V., and [illegible], Institute of Oceanology - "Some chemical features of sediments and ground [illegible] the latter in the Pacific (materials of the [illegible]" (Section VII.C.1)

BURLEY, V. A., Institute of Oceanology - "A study of equatorial currents in the western Pacific" (Section VII)

BURMISTROVA, V. M., and [illegible], Institute of Oceanology - "The formation of air masses in the northern part of the Pacific Ocean" (Section VII.A)

BUSALOVA, V. L., Institute of Oceanology - "The [illegible] of formation and transition courses of anti-cyclones in the northern part of the Pacific Ocean (Section VII.A)

Barsukov, V. L.

[illegible] SOV/[illegible]

Sovetskaya [illegible] Expedition, 1956.

Trudy [illegible] "Ob'" [illegible] (Second Soviet Antarctic Expedition, 1956. Transactions of the Arctic and Antarctic Scientific Research Institute [illegible] [Moscow-Leningrad] No. 7) 1,000 copies printed.

Sponsoring Agency: Ministerstvo [illegible] SSSR. Arkticheskiy i antarkticheskiy nauchno-issledovatel'skiy institut.

Ed. (Title page): I.V. Kuznetsov, Doctor of Geographical Sciences, Professor; Ed.: V. I. Gromov; Tech. Ed.: O. I. Kotlyarova.

PURPOSE: This book is intended for marine geologists and hydrologists.

COVERAGE: This is a collection of 9 articles on the hydrological and geological findings of the Second Soviet Marine Expedition, sponsored by the Arctic and Antarctic Scientific Research Institute of the Ministry of the Merchant Marine of the USSR as part of the International Geophysical Year program. The expedition, conducted on the diesel ship "Ob'" during [illegible], covered an entire Indian Ocean and the coast of Antarctica between 0 and 150° east longitude. The present volume, the seventh and last in a series on the Second Expedition, describes the work of the Expedition in investigating the following: The geomorphology of the ice bottom, by means of seismic devices; the geological structure and profile of the East Antarctic coast and the southern part of the Indian Ocean, through the collection of bottom deposits; the seismic-acoustical determination of the thickness of frozen bottom deposits; analysis of surface and depth sea currents; the relief of the bottom of the Davis Sea and the seven north of it, the Gunnerus Ridge, the region of the continental slope and shelf of Antarctica between [illegible] and 150° east longitude and 40 and 70° south latitude, the geomorphology of Queen Maud Land and Queen Mary Coast; glacier formation; seasonal quantitative and qualitative institutional and institutional distribution of plankton in the Antarctic part of the Indian Ocean; arctic fauna, including whales, seals, birds, fish, marine invertebrates, and microorganisms. The articles are written by members of the Institut okeanologii AN SSSR (Institute of Oceanology AS USSR), Institut geografii AN SSSR (Institute of Geography AS USSR), Zoologicheskiy institut AN SSSR (Zoological Institute AS USSR), and Ministerstvo Rybnogo khozyaystva SSSR (Ministry of Fish Industries of USSR [illegible]). No personalities are mentioned. Each article is accompanied by references.

Second Marine Expedition (Cont.) SOV/5460

TABLE OF CONTENTS:

Second Marine Expedition (Cont.) SOV/5460

AVAILABLE: Library of Congress (Card [illegible])

BARSUKOV, V.V.

Some observations on the blue wolf fish (Anarchichas latifrons Steemstrup et Hallgrimsson). Vop. ikht. 1 no. 1:19-28 '61. (MIRA 14:5)

1. Zoologicheskiy institut Akademii nauk SSSR.
(Barents Sea—Wolf fish)

BARSUKOV, V.V.

Dependence of the growth rate of fishes on the number of species in the generation. Biul.Inst.biol.vodokhran. no.11:37-41 '61.
(MIRA 15:8)

1. Zoologicheskiy institut AN SSSR.
(FISHES)

BALAKHONOVA, L.M.; BARSUKOV, V.V.

Run of the whitefish Coregonus muksun Pallas in the Ob' River and its distribution in the Ob' River. Vop.ikht. 1 no.2:262-274 '61. (MIRA 14:6)

1. Zoologicheskiy institut AN SSSR, Leningrad.
(Ob' River--Whitefishes)

BALAKHONOVA, L.M.; BARSUKOV, V.V.

Downstream migration of the young of the sturgeon Acipenser baeri Br. from the Irtysh River. Vop. ikht. 2 no.2:309-315 '62. (MIRA 15:11)

1. Zoologicheskiy institut AN SSSR, Leningrad.
(Irtysh River--Sturgeons) (Fishes--Migration)

BARSUKOV, V.V., kand.biolog.nauk

Can fishes really fly? Priroda 51 no.6:101-102 Je '62. (MIRA 15:6)

1. Zoologicheskiy institut AN SSSR, Leningrad.
(Flying fish)

BARSUKOV, V.V.; MEDNIKOV, B.M.

Symposium on rosefish held by the International Commission for the Northwest Atlantic Fisheries and the International Council for the Exploration of the Sea in 1961. Vop.ikht. 2 no.4:758-762 '62. (MIRA 16:2)

(Rosefish)

APPROVED FOR RELEASE: 06/06/2000 CIA-RDP86-00513R000203720006-1"

BARSUKOV, V.V.

Intraspecific variation of the Pacific Ocean perch (Sebastodes alutus Gilbert). Trudy VNIRO 49:231-252 '64.
(MIRA 18:5)

1. Zoologicheskiy institut AN SSSR.

BARSUKOV, Ya., inzhener.

Partition panels made of gypsum slabs. Stroitel' no.1: 16 Ja '57. (MLRA 10:2)

(Walls) (Gypsum)

BARSUKOV, Ya., inzh.

Assembly-line construction and combined operations in the construction of large-element apartment houses. Zhil. stroi. no.2:13-14 '62. (MIRA 16:1)

(Rostov-on-Don—Apartment houses)

[illegible], M. M.

Dissertation: "[illegible] of a Process for [illegible] Heat Transfer in a Layer of [illegible] and Its Application to the Operation of [illegible] in the Petroleum Processing Industry." Doct Tech Sci, Leningrad Tech Inst of Refrigeration Industry and Food Prod (TsNIIKh), [illegible]. (Izvestiya Vuzov, [illegible])

[illegible]

K

AUTHORS: Barsukov, Ye.Ya. and Skoblo, A.I. 65-10-5/13

TITLE: On the Hydrodynamic Stability of a Catalyst Layer in Separating Installations of Crude Oil Processing Plants (O gidrodinamicheskoy ustoychivosti sloya katalizatora v separiruyushchikh ustroystvakh apparatov dlya pererabotki nefti)

PERIODICAL: Khimiya i Tekhnologiya Topliva i Masel, 1957, No.10, pp. 21 - 28 (USSR)

ABSTRACT: The results of an investigation carried out by VNII NP (All-Union Scientific Research Institute of the Petroleum Industry) of the following problems are described: 1) A study of the hydrodynamics of the process of separation of gas stream from a layer of granular material; 2) A study of the cause of carry-over of a granular material in industrial installations; 3) Development of a method of designing separating equipment which would permit the choice of optimal operating conditions, and 4) a comparative evaluation of various types of separating equipment. In the study of the mechanism of the process of separation of a gas stream from a layer, transparent models were used in which the separation process in parallel and counter current flows could be observed. Measurements of the velocity of the gas stream leaving a layer of a granular material were

Card1/4

65-10-5/13

On the Hydrodynamic Stability of a Catalyst Layer in Separating Installations of Crude Oil Processing Plants

carried out with pneumeters and according to M.E. Aerov's method (Ref. 6 - the velocity curve of gas is determined on the basis of the intensity of the mass transfer from the surface of naphthalene grains into the gas stream). Both methods gave similar results. Studies of the mechanism of gas separation from a layer of stationary and moving granular material indicated that under industrial conditions, three main types of separation are possible: 1) with low gas velocities the usual filtering of the gas through the layer takes place. The surface of the layer formed under the natural repose angle is characterised by the stationary position of particles for a stationary layer and by their movement in the fields of gravity together with the whole granular mass for the moving layer. 2) The second type of separation is determined by the unstable state of particles in the immediate neighbourhood of the walls of the separator, similar to boiling, but without breaking of contact between particles in the remaining part of the layer. 3) At high gas velocities, the third type of the process takes place. It is characterised by a break in the normal separation, accompanied by the growth of the layer in the free space of the

Card 2/4

65-10-5/13

On the Hydrodynamic Stability of a Catalyst Layer in Separating Installations of Crude Oil Processing Plants

separator, followed by a carry-over of the granular material into the gas outlet system. It was established by visual observations and measurements that the distribution of velocities of gas leaving the layer is in many cases non-uniform. The maximum velocity is at the walls (Fig.2). In order to establish the influence of the intensity of the gas stream on the value of maximum velocity, a series of experiments within a wide range of Reynolds numbers (Re layer = 400 - 5 000) and wide fractions of granular materials (balls and tablets) was carried out. By mathematical treatment of the experimental results, formulae for the determination of maximum velocities of the gas stream of the walls for direct and counter-current streams were obtained (Equs. 1 and 2, respectively). The choice of the optimum gasodynamic conditions of the operation of a separator and the determination of the best conditions at which the process is characterised by a maximum amount of separated gas consist in finding the critical value of the maximum velocity above which the normal separation of gas ceases. On the basis of the theory of similarity and the experimental data (Table 1), a formula for the critical velocity (9) was

Card3/4

65-10-5/13

On the Hydrodynamic Stability of a Catalyst Layer in Separating Installations of Crude Oil Processing Plants

obtained. For practical calculations, simplified formulae (10) and (11) can be used. Similar formulae (16, 17) were also obtained by treating the experimental data according to the Lyakhovskiy method (Ref.9), using Slikhter and Kirpichev criteria. The equations obtained were used for check calculations of two types of industrial separators. The initial data and the results of calculations are given in Table 2. The results obtained confirmed the correctness of the proposed method. It was also established that the efficiency of separation with descending gas stream can be increased by fixing dumping plates at an angle of the natural repose to the bottom part of the walls of the separator. Characteristic distribution curves of gas velocities at the outlet from a layer in the presence (Curve 1) and absence (Curve 2) of dumpers are shown in Fig.2. There are 2 figures, 2 tables and 9 Russian references.

ASSOCIATION: VNII NP

AVAILABLE: Library of Congress

Card 4/4

BARSUKOV, Ye.Ya.; BOTNIKOV, Ya.A.; YEROKHIN, G.S.

Dynamics of gas flow in the operation of cyclone discharge pipes in petroleum refining units. Khim.i tekh.topl.i masel 5 no.4:45-49 Ap '60. (MIRA 13:6)

1. Vsesoyuznyy nauchno-issledovatel'skiy institut po pererabotke nefti i gaza i polucheniyu iskusstvennogo zhidkogo topliva.
(Gas flow) (Petroleum--Refining)

BARSUKOV, Ye.Ye.

Dynamics of a gas jet in a fluidized bed. Khim. i tekh. topl i masel 9 no.8:13-18 Ag '64. (MIRA 17:10)

1. Vsesoyuznyy nauchno-issledovatel'skiy institut po pererabotke nefti i gazov i polucheniyu iskusstvennogo zhidkogo topliva.

ZYKOV, M.P.; KOZ'MIN-SOKOLOV, B.N.; BARSUKOV, Yu.I.

Portable table lamp with bactericidal action. Lab. delo 7 no.2: 60 F '61. (MIRA 14:1)

1. Kafedra mikrobiologii (zav. - prof. V.N.Kosmodamianskiy) I Leningradskogo meditsinskogo instituta imeni akad. I.P.Pavlova.
(ULTRAVIOLET RAYS--THERAPEUTIC USE)

33539
S/043/62/000/001/009/009
D299/D303

24.3100 (also 1051, 1163)

AUTHORS: Barsukov, Yu.I., Mandrikov, V.I., Molchanov, A.P., and Nagnibeda, V.G.

TITLE: Artificial radiation-source for radiotelescope calibration

PERIODICAL: Leningrad. Universitet. Vestnik. Seriya matematiki, mekhaniki i astronomii, no. 1, 1, 1962, 166 - 167

TEXT: An artificial radiation-source is described, used by the Department of Astrophysics of Leningrad State University. This "artificial sun" is characterized by high brightness temperature, almost equal at all its points, and, when placed in the wave field of the radiotelescope antenna, it has angular dimensions equal to the dimensions of the sun. As radiation source, plasma in gas-discharge tubes was used. The electron temperature of the plasma attains 10^4 - 10^5 °K, and the size of the tubes is fairly large. In using only the radiation from the middle part of the tubes, it is possible to obtain a source with evenly-distributed brightness. The artificial

Card 1/3

33539
S/043/62/000/001/009/009
D299/D303

Artificial radiation-source for ...

sun incorporated 20 ordinary gas-discharge tubes (of day-light) ДС-30 (DS-30). The tubes were placed in one row, whereby the radiating region formed a rectangle (0.8 x 0.5 m). The source was placed in the wave field of the radiotelescope antenna, at a distance at which its solid angle equalled the solid angle of the sun. The signal from the artificial source was compared, by means of ordinary telescopes, with the signal from the sun, at 2.0, 3.6 and 4.5 cm - waves. It was found that the artificial radiation-flow was 0.15 to 0.20 of the solar radiation. Hence the radiation temperature of the tubes was about 2000 - 4000°K. By putting a screen behind the tubes, the radiation flow was increased by 1.5 times approximately. In the experiments already carried out, the tubes were supplied by altern. current; a d.c. supply would somewhat increase the radiation flow. Hence the use of a screen and direct current, would lead to an effective temperature of up to 4000 - 8000°K approximately. The effective temperature could be further increased by ensuring adequate optical thickness of the irradiating region (by adding tube rows, for example). The artificial sun can be calibrated by means of an absolute black body. It was found (by experiment) that some special

Card 2/3

33539

S/043/62/000/001/009/009
D299/D303

Artificial radiation-source for ...

types of resins are absolute black bodies in the cm-range, having a reflection coefficient below 0.5 %. Another method of calibration consists in using a funnel -- directed towards the zenith -- which is alternately covered by the black body and by the artificial sun. There is 1 Soviet-bloc reference.

SUBMITTED: August 6, 1961

Card 3/3

BARSUKOV, Yu.I.; MANDRIKOV, V.I.; MOLCHANOV, A.P.; NAGNIBEDA, V.G.

Artificial radiation source for the calibration of radio telescopes. Vest. IGU 17 no.1:166-167 '62. (MIRA 15:1)
(Telescope, Radio)

BIRUKOV, Ya.F., Cand Tech Sci — (diss) "Study of the ~~transitional~~ ~~process of shutting off the conduction-electronic transition~~ blocking of the generation at high injection levels." Leningrad, 1960. 10 pp (Min of Higher Education USSR. Len Electrotech Inst im V.I. Ul'yanov (Lenin)). 150 copies (KL, 51-60, 141)

BARSUKOV, Yu.K.

Transition locking of plane semiconductor diodes at high currents. Fiz. tver. tela 1 no.4:602 '59. (MIRA 12:6)

1.Institut poluprovodnikov AN SSSR, Leningrad.
(Transistors)

BARSUKOV, Yu.K.

On the theory of the pulse method for the separation of voltages in a semiconductor diode. Fiz. tver. tela 1 no.6:886-894 Je '59. (MIRA 12:10)

1. Institut poluprovodnikov AN SSSR, Leningrad.
(Diodes)

66268

SOV/181-1-11-3/27

~~24(6)~~ 24.7700

AUTHOR: Barsukov, Yu. K.

TITLE: Investigation of the p-n Junction at Large Current Densities

PERIODICAL: Fizika tverdogo tela, 1959, Vol 1, Nr 11, pp 1659 - 1667 (USSR)

ABSTRACT: The scope of this study was the investigation of the transition process of blocking the p-n junction at large levels of injection on germanium diodes DG-Ts 23 and DG-Ts 25. The duration of the first stage of the process is measured as the characteristic of the junction blocking process, which corresponds to the inverse current through the p-n junction. The inverse current is limited by the outer circuit. The measuring arrangement is briefly described (see Fig 1). To clarify the type of the rear contact and to measure the variation of the excess concentration on the charge carriers in the basic layers, the total voltage across the diode, corresponding to the direct current, was split and the ohmic and the diffusion components were measured. The measuring arrangement required is also illustrated in figure 1, and is briefly described. Figures 3-6 represent the measured dependences. The experimental data are theoretically confirmed. The following can be assumed: the

Card 1/2

66268

Investigation of the p-n Junction at Large Current Densities SOV/181-1-11-3/27

decisive factor determining the behavior of p-n junction at large current densities is the delayed increase of the concentration of the charge carriers with respect to the current, caused by a noticeable injection in the high impurity region. The derived information can be used for the preparation of inertia-free pulsed diodes with a small area of p-n junction, which operate at increased current densities. The results obtained are compared with those of the investigations by Penin and Cherkas (Ref 10), Penin (Ref 11) and Stafeyev (Ref 12). The present investigation was supported by the helpful assistance of G. Ye. Pikus. There are 7 figures and 13 references, 6 of which are Soviet.

ASSOCIATION: Institut poluprovodnikov AN SSSR, Leningrad (Institute of Semiconductors at the AS USSR, Leningrad)

SUBMITTED: February 11, 1959

Card 2/2

YAKOVCHUK, Nikolay Stepanovich; CHELNOKOV, Valentin Yevgen'yevich; GEYFMAN, Mikhail Petrovich; BARSUKOV, Yu.K., kand.fiz.-matem. nauk, retsenzent; SHATS, S.Ya., kand.tekhn.nauk; VLASOVA, Z.V., red.; TSAL, R.K., tekhn.red.

[Junction transistors] Ploskostnye tranzistory. Leningrad, Gos.soiuznoe izd-vo sudostroit.promyshl., 1961. 262 p.
(Transistors) (MIRA 14:7)

BARSUKOV, Yu.K.

Analysis of linear networks with randon variable parameters. Izv. vys. ucheb. zav.; radiotekh. 5 no.4:459-463 Jl-Ag '62. (MIRA 16:6)

1. Rekomendovana kafedroy teoreticheskikh osnov radiotekhniki Leningradskogo elektrotekhnicheskogo instituta im. Ul'yanova (Lenina).

(Electric networks)

ACCESSION NR: AT4017558 S/3074/62/000/047/0109/0116

AUTHOR: Barsukov, Yu. K. (Docent)

TITLE: Measurement of instantaneous values of periodic pulsed voltages by a compensation method

SOURCE: Leningrad. Elektrotekhnicheskiy institut. Izv., no. 47, 1962, 109-116

TOPIC TAGS: pulsed voltage measurement, periodic pulsed voltage, instantaneous voltage, compensation method, cathode coupler, differential amplifier, electron hole junction, comparison method

ABSTRACT: Low pulsed voltages (of the order of fractions of a volt of several volts) can be measured by a null method using a pulsed differential amplifier with cathode coupling as the indicator, described previously by the author (ZhTF v. 25, No. 8, 1477 — 1490, 1955 and v. 26, No. 9, 2062 — 2066, 1956). The effect of the properties of the differential amplifier on the accuracy with which the two voltages are compared is analyzed. The measurement method was used to investigate the pulsed characteristics of electron-hole junctions. The experiments have shown that the method is quite workable, and that the comparison voltage is

Card 1/4

ACCESSION NR: AT4017558

best chosen in the form of a rectangular pulse. The best accuracy is obtained by using for the comparison voltage a fraction of a large pulse picked off a precision voltage divider. Orig. art. has: 3 figures and 4 formulas.

ASSOCIATION: Leningradiskiy elektrotekhnicheskiy institut (Leningrad Electrotechnical Institute).

SUBMITTED: 00Jan61 DATE ACQ: 20Mar64 ENCL: 02

SUB CODE: GE, SD NO REF SOV: 005 OTHER: 000

Card 2/4

ACCESSION NR: AP4017558

ENCLOSURE: 01

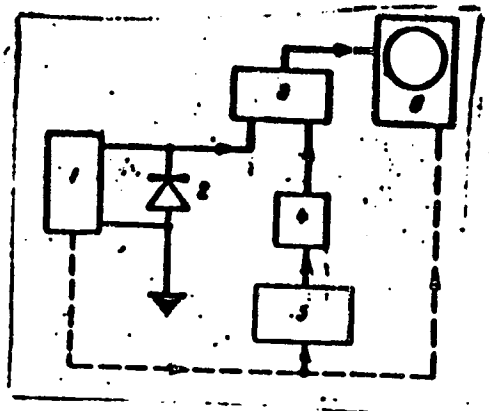

Circuit for measurements by the compensation method

1 - current pulse generator, 2 - investigated diode, 3 - differential amplifier, 4 - voltage divider, 5 - comparison voltage pulse generator, 6 - oscilloscope (null indicator), ---------- synchronization circuit

Card 3/4

ACCESSION NR: AT4017558

ENCLOSURE: 02

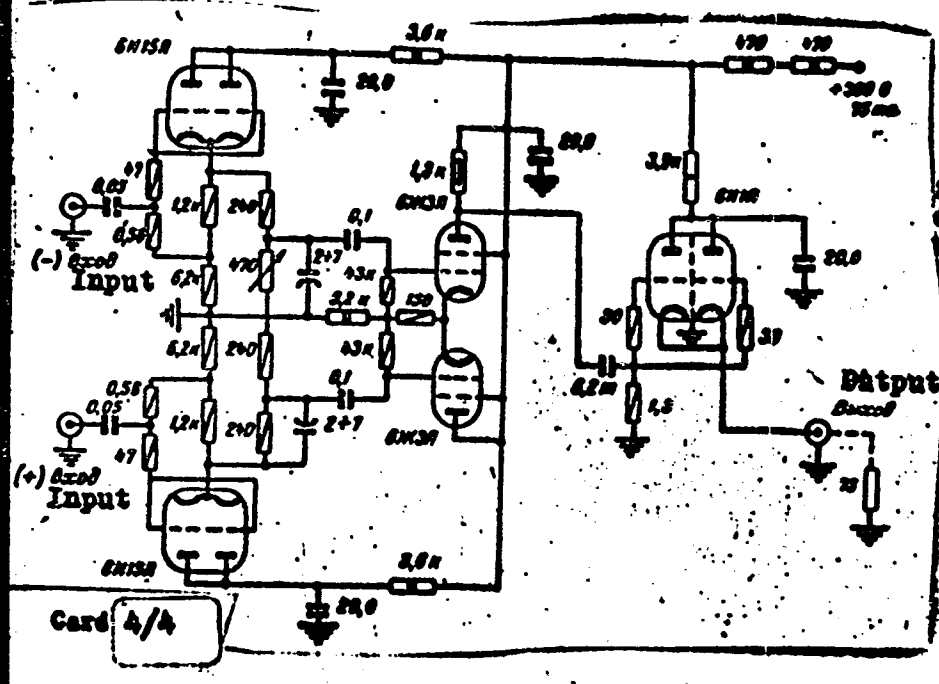

Schematic diagram of differential amplifier with cathode coupling

The 75 ohm resistor is connected at the output of the coaxial cable which connects the amplifier with the oscilloscope

Card 4/4

S/146/62/005/005/010/016
D201/D308

AUTHOR: ~~Barsukov, Yu. K.~~

TITLE: An efficient order of counting in control binary counters

PERIODICAL: Izvestiya vysshikh uchebnykh zavedeniy. Priborostroyeniye, v. 5, no. 5, 1962, 81-84

TEXT: The author suggests a method of design of a binary counter, controlling the switching of logic systems, in which the adjoining states differ by one digit only. If the timing pulses are at the same time broken down into even and odd, the circuit of such a counter becomes as simple as that of the control counter circuit for natural counting order with paralleling of the timing pulse inputs. The breaking down of pulses into even and odd ones makes it also possible to use the counter as a simple reversing arrangement, which may be successfully used in reversible step-by-step arrangements. The above counters were used in an experimental control of an 8 x 8 matrix of a time pulse analyzer and have shown good

Card 1/2